MISGRIPPING SENSOR UNITS
—LIGHTWEIGHT TYPE—

RoHS

MGUG
MGUGN
(Switchless type)

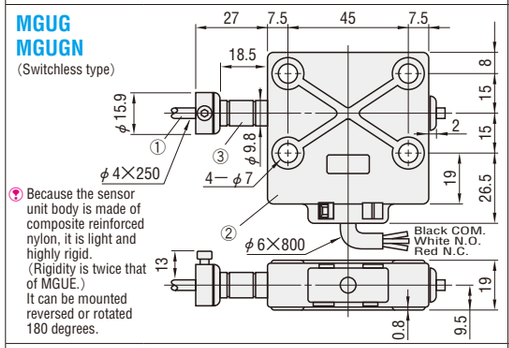

Because the sensor unit body is made of composite reinforced nylon, it is light and highly rigid.
(Rigidity is twice that of MGUE.)
It can be mounted reversed or rotated 180 degrees.

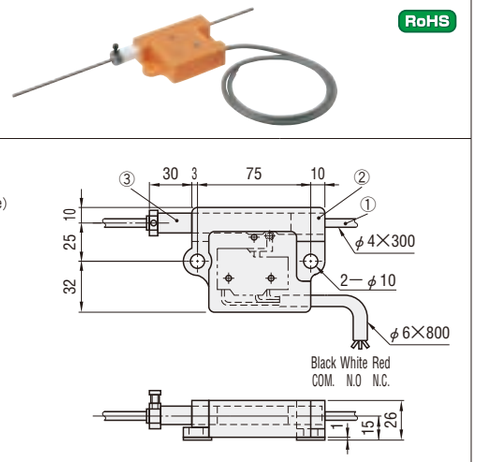

MGUC
MGUCN
(Switchless type)

RoHS

MGUE
MGUEN
(Switchless type)

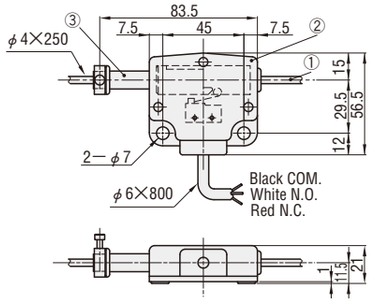

RoHS

MGUL
MGULN
(Switchless type)

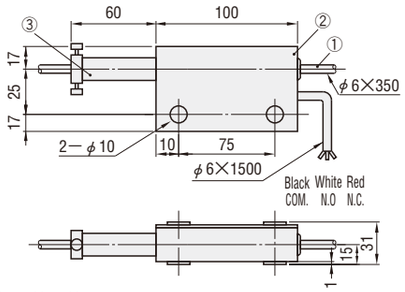

MGUL can be mounted from either side.

①Check bar	M SWP—A SS400 (MGUL・MGULN)	● Microswitch (product of OMRON) MGUC Z—15GW2255—B MGUE・MGUL・MGUG D2SW—3L2H	Utility model No. 55—32665 32666 13558 13559
②Protective cover	M Material Nylon, reinforced nylon (MGUG・MGUGN)		
③Rod bar	M Polyacetal		

Order Catalog No. MGUG MGUCN

Days to Ship Quotation

Price Quotation

Catalog No.	Base unit price 1~19 pieces
MGUG MGUGN	Quotation

Catalog No.	Base unit price 1~19 pieces
MGUC MGUCN	Quotation

Catalog No.	Base unit price 1~19 pieces
MGUE MGUEN	Quotation

Catalog No.	Base unit price 1~19 pieces
MGUL MGULN	Quotation

<MGUC・MGUE・MGUL・MGUG>

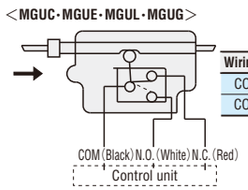

Wiring connections	Signal
COM and N.C.	OFF when activated
COM and N.O.	ON when activated

●How to use

The built-in microswitch in the misgripping sensor unit is activated when the unit rod is pressed.
It outputs a signal when the grip fingers have failed to grasp the workpiece (misgrip).
Therefore, wire the unit so that the press machine stops when the signal is output.

●Operation

Check bar motion	Rod bar motion	Status	Length of stroke MGUC・MGUE・MGUG	Length of stroke MGUL
		Advance end	0mm	0mm
		Switch ON	5±1mm	5±1mm
		Stable detection	8mm	8mm
		Reverse end	15mm	50mm

MISGRIPPING SENSOR UNITS
—HIGH-RIGIDITY TYPE—

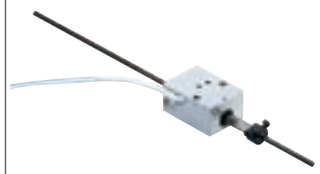

RoHS

With check bar
MGUA
MGUAN (Switchless type)

Without check bar
MGU
MGUN (Switchless type)

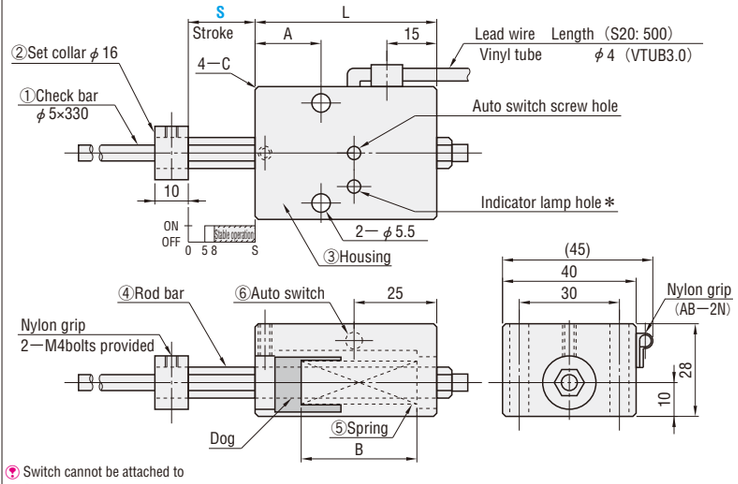

Switch cannot be attached to Switchless type afterwards.

①② M SS400
③ M Aluminum alloy
④ M SS400
⑤ M Equivalent to SWOC—V

S Black oxide (Fe_3O_4)
S Electroless nickel plating

⑥

Automatic switch	D-A90 (without indicator lamp) (product of SMC)		
Applicable load	IC circuit, relay, PLC		
Load voltage	AC 24V or less DC	AC 48V or less DC	AC 100V or less DC
Max. load current	50mA	40mA	20mA

L	A	B	C	⑤ Spring	Catalog No. Type	Stroke S	Base unit price 1~99 pieces With check bar MGUA	With check bar MGUAN	Without check bar MGU	Without check bar MGUN
55	20	35	0.3	WY13—45	MGUA MGU (Switchless type) MGUAN MGUN	20	Quotation			

Order Catalog No. MGUA 20

Days to Ship Quotation

Price Quotation

Alterations Catalog No. — (A93・DP)
MGUA 20 — A93

Alteration	Automatic switch change			Addition of protective cover on lower part of unit body
Code	A93			DP
Spec.	Changed to type with operation check indicator lamp.	Automatic switch product number: D-A93 (product of SMC)		•Fastened by M4 screws. •Check bar position is raised by 3mm.
		Applicable load: Relay, PLC		
		Load voltage: 24V DC	100V AC	
		Load current range and Max. load current: 5~40mA	5~20mA	
		Indicator lamp: Red LED illuminates when switch is ON.		
1Code	Quotation			Quotation

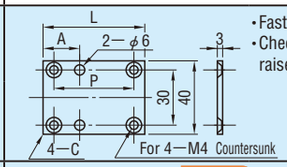

Stroke S	P
20	43

●Wiring

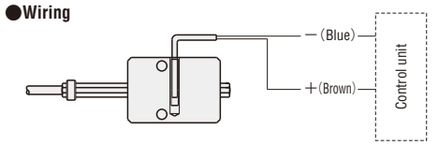

MGUA has a N.O. contact only (ON when activated).
In the following cases, the contact life may be shortened. The use of contact protection box CD-P11 or CD-P12 is strongly recommended.
①The load used is an induction load.
②The wire length is 5m or longer.
③The load voltage is 100V AC or higher.

Example

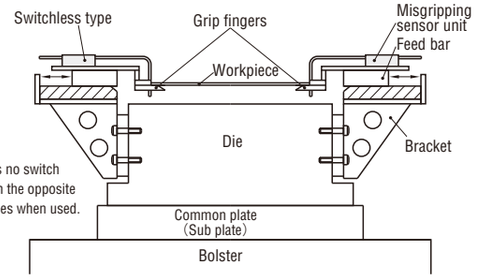

●The switchless type has no switch cable and is installed on the opposite side for balance purposes when used.